Physical management and interpretation of an environmentally controlled composting ecosystem

E. Harper[A], *F. C. Miller*[B] *and B. J. Macauley*[A]

[A] Department of Microbiology, La Trobe University, Bundoora, Vic. 3083, Australia.
[B] Sylvan Foods Ltd, Worthington, PA 16262, U.S.A.

Summary. Compost for mushroom cultivation was prepared in an environmentally controlled composting (ECC) system of 10 t maximum loading. Early in processing, ventilation was manually controlled to provide aerobic conditions. When the desired compost temperatures were reached, control through temperature feedback was used. Physical uniformity of processing conditions was achieved by recirculating large volumes of air within the reactor.

Heat production was found to peak early in the composting process, reaching a maximum of about 8–9 W/kg initial wet (67–71%) substrate. When compost temperatures were allowed to rise to 63°C, maximum heat production occurred at 55–63°C. Total heat production per initial wet weight averaged 1.23 MJ/kg (range 0.92–1.51 MJ/kg), or 5.11 MJ/kg (range 4.04–7.57 MJ/kg) when measured per initial volatile dry matter. Heat evolution averaged 18.3 MJ/kg decomposed (range 15.4–22.0 MJ/kg).

Oxygen usage followed a pattern similar to that of heat production, reaching a maximum in the 55–63°C range. Peak O_2 usage was about 9×10^{-7} kg O_2/kg compost.s, or in volume terms, 2.9×10^{-6} m^3 air/kg compost.s. During temperature feedback control, O_2 levels were maintained at about 19%.

The enclosed ECC system permitted mass balance data to be collected for various components. Trials demonstrated that temperature and O_2 could be closely controlled, resulting in good compost uniformity.

Introduction

Preparation of a nutritional substrate for the cultivation of the common mushroom (*Agaricus brunnescens* Peck, synonym *Agaricus bisporus*) is achieved by composting various agricultural materials. Typical processing includes a largely uncontrolled outdoor Phase I, and an environmentally controlled Phase II (Fermor *et al.* 1985). Given a suitable substrate, activity during Phase I is determined largely by microbial response to physical factors such as temperature and O_2 limitations (Miller *et al.* 1989*a*). Problems related to Phase I include odours, gaseous NH_3 pollution, variations in compost quality, difficult materials handling and inefficient utilisation of raw materials. Investigation aimed at improving traditional composting methods is difficult because precise ecological control is not possible during Phase I, and activity analysis is frustrated by temporal and spatial variability in composting stacks. Alternatively, development of environmentally controlled composting (ECC) methods is a means of better understanding the process, and of improving commercial practice. Controlling and understanding mushroom composting are inseparably linked.

Various approaches to mushroom compost production have been reviewed by Fermor *et al.* (1985). Recently, various investigators (Smith 1983; Laborde *et al.* 1986; Gerrits 1987; Perrin and Gaze 1987; Miller *et al.* 1990) have produced mushroom composts under conditions of much greater environmental control within enclosed systems. While control strategies have varied, mushroom cropping yields on such composts have been encouraging. The different approaches have arisen due to uncertainty in the definition of a good compost for mushroom production.

Compost is an ecosystem that responds strongly to changes in physical factors that select for microbial activity; different processing scenarios can lead to different outcomes. Conversely, composting activity can profoundly affect physical factors, such as temperature, O_2 concentration and moisture content. New processing variations can be difficult to implement because of an incomplete knowledge of the physical factors influencing compost processing. Rational engineering of ECC systems requires more information on the physical consequences of activity, while better engineered systems can foster a greater scientific understanding of composting ecosystems.

Temperature is a primary factor in controlling composting activity (MacGregor *et al.* 1981; Miller *et al.* 1989*a*). Management of metabolically released heat is the means of controlling temperature. The amount of O_2 also determines activity, but it can be managed

conveniently in conjunction with a heat management strategy based on ventilation (Finstein *et al.* 1986).

Observations on heat and mass changes occurring during composting have been made for straw (Carlyle and Norman 1941), refuse (Wiley 1957), sewage sludge (Miller 1984), leaves (Finstein *et al.* 1986), and rice hulls and flour (Hogan *et al.* 1989), but only preliminary work has been reported for mushroom composting substrates (Miller *et al.* 1989*b*). In practice, maximal rates of heat evolution define the heat removal capacity needed to control temperature. Similarly, peak O_2 demand defines the minimum ventilation required to maintain aerobic conditions. Other physical factors related to heat, mass and gas transfer are needed to refine system control.

In a previous paper, Miller *et al.* (1990) described a series of mushroom composting trials in which an ECC system was used to gain uniform control over temperature and O_2 concentration. The rationale for, and results of, processing compost under moderately thermophilic and aerobic conditions, including crop yield and other cultural data from growing trials, were reported. Continuing the analysis of these previous investigations, this paper examines the results of several ECC trials with reference to heat, mass change and other physical factors.

Materials and methods

Composting reactor

The trial ECC system used here is based on a standard (26.4 m^3) refrigerated container (often referred to as a 'tunnel'), with a forced ventilation system (Fig. 1). Previous work (Miller *et al.* 1989*b*) showed that a recirculation fan with a nominal capacity of 0.7 m^3/s was sufficient to control temperatures to within the upper limits of mesophillic activity (40–55°C) for a vessel this size. An axial fan (Woods, 0.37-m-diameter, 2500 rpm) delivered approximately this amount with a maximum static head of about 390 Pa (40 mm water). This high rate of recirculation was used to minimise the temperature gradient across the compost and to create uniform conditions within the compost mass.

The exhaust/recirculation proportion was controlled by a balancing damper located midway between the exhaust and inlet ports. Fresh air intake was controlled by a servo damper system. Control was based on air temperature on the intake side of the system after fresh air had been drawn in through a filter. The damper was activated by a temperature controller, although manual offsetting of this damper was used in the early part of trials to ensure aerobic conditions. Air exhaust was determined by the rate of fresh air induction. With the fresh air damper fully closed, leakage in this system was around 3% of the recirculation rate. Air from the fan was distributed along open-topped, longitudinally orientated,

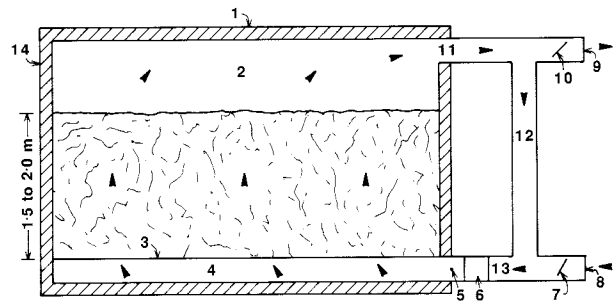

Fig. 1. Main elements of the composting tunnel construction. Stippled area represents compost in the tunnel during routine operation; arrows represent the direction of airflow. 1, insulated structure of the modified container; 2, tunnel free headspace above compost; 3, air-permeable false floor for ventilation; 4, ventilative underduct; 5, inlet air temperature control sensor; 6, in duct fan; 7, automatically controlled fresh air inlet damper; 8, fresh air inlet with air filter; 9, exhaust port; 10, manually set exhaust flow control balancing damper; 11, exhaust air temperature sensor; 12, recirculated air; 13, mixed fresh and recirculated air; 14, double doors with air seals for loading and unloading.

5-cm-deep, aluminium channels in the tunnel floor, and into the compost. The floor consisted of shade mesh, underlain with 4-cm steel mesh, which was in turn supported by hardwood planks, resulting in a total air porosity of about 60%.

Measurements

Wherever possible a datalogger (Datataker DT100F) was used to collect information. Time interval of scanning was normally 5 min. Datalogging was used for the following parameters.

Compost temperature. Type T thermocouples were fixed to wooden dowels and inserted in the compost at loading. Both horizontal and vertical orientations were used to monitor variations in temperature within the compost.

Air intake and exhaust conditions. A combination of platinum resistance and accurate solid state temperature thermometers were used to monitor inflow and exhaust temperatures. Wet and dry bulb temperatures of the intake air were measured by a forced aspiration system in a standard Stevenson screen, placed as close as practical to the fresh air intake.

Mass loss. Electronic scales (Barlo Titan 10) with a maximum capacity of 10 t were placed under the container for later trials (trial 6 on), and the total container and compost mass was measured. In addition, compost volume was assessed by visual estimation of compost height through an access port.

Air flow, recirculation and fresh air intake rates. These were measured by pressure differentials across rounded and sharp-edged orifices, respectively, and the use of standard American Society of Heating

Refrigerating and Air-conditioning Engineers (ASHRAE) orifice equations (ASHRAE 1981), or by derivation from mass loss rates as explained below. A differential pressure detector was installed across the intake orifice and continuously logged. The pressure profile within the compost was measured by placing rigid plastic tubing taped to dowels in the compost. Permanent fixtures under the floor, above the compost, and in pressure taps in the ventilation ductwork were also used. Simple fluid manometers were used to measure pressures.

Data collected manually at 4–8 h intervals included gas concentrations and compost sampling. Ammonia and CO_2 were measured with Draeger or Gastec tubes. Side by side comparison of these 2 tubes gave very good agreement. Oxygen was measured with either a Teledyne 320P/D or a Draeger Oxywarn 100 O_2 analyser. Gas samples were taken from sample ports on the exhaust side of the recirculation system before fresh air addition. Occasionally, O_2 samples were withdrawn from the pressure profile installation, to monitor the O_2 usage profile within the compost. At the beginning and end of each trial, compost was subsampled throughout loading and unloading. Samples were analysed for moisture content, Kjeldahl N, NH_3, pH, ash and total carbon (see Miller *et al.* 1990). At the completion of some trials, detailed moisture and density samples were taken at known locations.

Data analysis

Due to the enclosed nature of the ECC system, with point source exhaust and entry ports, the overall mass balance can be expressed in finite difference form, over short time periods, as

$$dM/dt = q_o - q_i$$

where M is mass; t is time; and q_o and q_i are the mass flow rates at the exhaust and inlet ports, respectively. In addition, mass loss can be partitioned to dry matter and water losses:

$$M = Md + Wr$$

where Md is the compost dry matter, and Wr is the water remaining. Correction can be made for the metabolic production of water, assuming 0.55 kg of water is produced under aerobic conditions (Griffin 1977; Hogan *et al.* 1989) for each kg of dry matter lost. Alternatively, metabolic water production can be estimated from the difference between the calculated and the measured final moisture content. The partitioning of mass losses to these components requires individual gas components to be evaluated.

Gases of importance are NH_3, CO_2, O_2, H_2O, N_2 and Ar. Summation of the components per unit mass of dry air is conducted at both the inlet and exhaust ports, and includes the change in the mass leaving the container as a result of biological activity and increasing moisture load. Nitrogen and Ar are assumed to be inert with respect to the composting process. Other gas masses are calculated from measured concentrations (NH_3, CO_2 and O_2 at the exhaust port), or from standard atmospheric values (O_2, 20.9%; CO_2, 0.03%; and NH_3, 0% by volume at the inlet port) by the use of the gas laws, with corrections for non-ideal behaviour (Barrow 1973) being applied. Moisture loads are calculated using ASHRAE (ASHRAE 1981) and ASAE (Young and Day 1988) psychometric equations. Measured wet and dry bulb temperatures are used for the inlet air, and the exhaust air was assumed to be at 100% relative humidity (RH) (Hogan *et al.* 1989).

Air intake can also be expressed in terms of volume per unit time, using the moist air density evaluated through the ASHRAE equations (ASHRAE 1981). After calibration of the airflow pressure transducer, air volume flow rates can be used to calculate mass flow rates, and hence dM/dt.

Following this mass balance, a heat balance equation can be constructed:

$$H = (E_o - E_i) + dS/dt + (K \times dT) - P$$

where H is the heat production rate (W); E_o and E_i are the enthalpy out and enthalpy in (W); S is the summation of all heat storage components (J), the important components being compost moisture and dry matter, the container, and the internal air volume; K is the apparent thermal conductivity (W/°C) of the container and ventilation system as a whole; dT is the thermal gradient (°C) from the compost to ambient conditions; and P is the mechanical gain in energy (W) from the fan.

The enthalpy components are calculated using the ASHRAE equations (ASHRAE 1981) and the mass flow rates calculated above. Corrections are made for the increased mass and altered specific heat capacity of the exhaust air (Smith and Van Ness 1975). The thermal properties of the compost dry matter are assumed to be similar to those of 'haylage' (Jiang *et al.* 1986). Calibration of the tunnel heat loss and fan energy input was undertaken. Container heat loss is taken as 64 W/°C, and the fan energy input as 1.44 kW. Most results are presented, for convenience, in units of MJ/kg of moist compost, or a rate derived from these units.

A basic sensitivity analysis of the computer programs shows P and K to have negligible effects on heat production calculations. Error analysis (Fritschen and Gay 1979) shows the component with the largest uncertainty to be the saturated vapour pressure at the exhaust port. Calibration shows the error in temperature measurement at the exhaust port to be ± 0.2°C. The other major source of error is the uncertainty in the measurement of the O_2 concentration, which, in the absence of CO_2 measurements, was used to calculate the

mass of exhaust air and, hence, to partition moisture and dry matter losses. These errors, and numerical errors when running the model, accumulate to <1.7% on a total mass basis and provide a good measure of the overall accuracy of the above model. The possibility that sampling and analysis errors occur and influence final results is discussed later.

Composting ingredients

A mixture representative of that used in commercial composting formed the basis of the trial compost. The major components were fresh wheat straw (median length about 0.30 m), deep litter poultry manure as a nitrogen (N) source, and gypsum (Table 1). Additional N sources in the form of cotton seed meal, and bulking agents such as cotton hulls, were often added in varying quantities. Two trials also included cotton seed oil, in an attempt to supply a lipid source suitable for mushroom growth. Further information on the compost mixtures, preparation and mushroom yield is given in Miller *et al.* (1990).

Preparation of materials

Pre-treatment began by chopping the straw with a feed mill, resulting in a straw median length of 5 cm. This was intended to increase the final bulk density and the surface area open to composting processes, and to increase the water-holding capacity of the composting mixture. The straw was then stacked and wetted for 3 days with fresh water. The other components were then added to the wetted straw and mixed either with a commercial mushroom compost turner or, for the majority of trials, with a manure spreader. Water was added at mixing to achieve the maximum water content. With the exception of 3 trials, the compost components were mixed and loaded manually within 12 h. This was to ensure that measurements included the whole composting process. The exceptions were more commercially orientated trials which included pre-composting periods of up to 4 days.

Results

A summary of the changes occurring during composting is shown in Table 1. Trial 15, the last trial, had the highest initial mass loading and, as a consequence, placed the largest demand on the ventilation and recirculation system. In most respects, trial 15 was intermediate to the range of compost formulations tested and is used to illustrate the processes occurring in ECC. Compost moisture declined from 75.7 to 65.9%, which, combined with dry matter losses (30%), resulted in a total mass loss of 49%. Trials with low total mass loss were short trials at low constant temperatures (47°C). Much of the total mass loss in all trials was water, which was used to cool the compost evaporatively. Total N rose with composting, with the incorporation of N into organic material. The ash

Table 1. Compost components, and changes recorded with composting

	Range used	Trial 15
Initial loading (kg)	5254–8583	8583
Compost components[A]		
Wheat straw	1	1
Cottonseed meal	0–0.52	0.07
Cottonseed oil	0–0.06	0.04
Cotton hulls	0–0.22	0
Chicken deep litter	0–1.47	1.0
Gypsum	0.06–0.22	0.07
Trial length (h)	145–362	190
Moisture in (%)	70.0–79.1	75.7
Moisture out (%)	57.5–72.9	65.9
Total N in (% DM)	1.44–2.43	1.85
Total N out (% DM)	1.93–2.87	2.41
C:N in	27.2–44.6	23.5
C:N out	13.9–20.0	16.6
pH in	5.98–8.30	6.92
pH out	5.86–8.17	7.35
Ash in (%)	10.8–24.4	13.0
Ash out (%)	15.3–30.5	19.9
Volatile matter lost (%)	26–33	30
Total mass lost (%)	35–59	49

[A] Components are referenced by weight to fresh straw.

contentincreased as volatile matter was lost, while the C to N ratio showed a decrease, with proportionally more carbon being lost through respiration. Nitrogen was conserved. Although pH was expected to decline eventually during composting, mainly through the incorporation of NH_3 into the biomass, trial 15 showed a small rise. Some trials also showed slight rises in pH, while in others, pH declined. The reason for this is unknown.

The loss of volatile matter during composting is of economic interest (Table 1). In conventional mushroom composting, volatile matter losses are generally around 60% of the initial materials (Smith 1983; Miller and Macauley 1989). ECC reduces this loss considerably, to around 30%. This improved conservation of mass leads to much greater productivity of mushrooms on a raw material input basis (Miller *et al.* 1990).

Temperature

In several of the early trials, measurement of the variation in temperatures along the length of the tunnel showed differences of <2°C throughout the trial. However, small differences in moisture contents were discovered, as discussed later. Cross-container temperatures were also uniform, with differences <2°C being the norm, other than near the container walls, where differences of up to 3°C were found on occasions. This was due to a combination of conduction of heat through the container walls, and cooler condensation

forming on the wall surfaces above the compost surface and running down into the compost mass. As the compost near the wall was significantly wetter than the bulk of the compost, differences in composting processes may also have occurred. However, this wet compost was of limited volume.

Temperature control over the composting process was very good (Fig. 2*a*), with air out temperature used as the guide for tunnel operation. The intended temperature regime included a 63°C peak to 'pasteurise' the compost (to kill any mushroom mycelium and possible pathogens, such as nematodes), followed by a 55–57°C constant temperature period to encourage thermophilic bacterial growth, and then a constant 45–47°C period to 'condition' the compost and to result in colonisation with the mesophilic fungi shown to be associated with the successful growth of mushroom mycelium after spawning (Ross and Harris 1983; Straatsma *et al.* 1989). Rapid microbial growth and heat production saw the pasteurising stage reached within 10 h of loading.

Noticeable features were the stability of compost temperature, and the rapid response of compost temperature to changes in the inlet air temperature set point (Fig. 2*a*). The maximum difference recorded between the inlet and exhaust air during this trial was 6.5°C, which occurred during the cool down from pasteurising. Rapid cool downs were used to minimise the time spent controlling the composting process. The effective insulation of the tunnel was demonstrated in a trial where composting was continued for 360 h. The final compost temperature only dropped to 46°C, while the set point was still 47°C. Other trials were finished well before heat production dropped to a level where temperature began to decline.

Air flow

Comparison of the mass balance technique and orifice equations to calculate air flow resulted in the orifice equations underestimating the air intake rate by about 10%. This may have been the result of both leakage in the ventilation system and container, and turbulent flow in the region of the orifices.

For trials where a rapid build-up in temperature was desired, the air intake rate was manually controlled by setting an offset on the control damper. In these trials, the air intake rate ranged from 4.4×10^{-6} to 7.0×10^{-6} $m^3/s.kg$ moist compost during this initial phase, depending on the initial compost loading. The resulting rates of temperature increase ranged from 2 to >4°C/h.

Air intake rates increased rapidly when the automatic controller system was activated (Fig. 2*b*) once pasteurisation was complete. The peak air intake rate of 0.175 m^3/s was the largest measured in all trials, a consequence of this trial having the highest total heat production rate. At this peak, the fresh air intake was about 30% of the measured recirculation rate. Recirculation (Fig. 2*c*) declined during the early heating-up period, and then remained relatively constant throughout the trial, once the constant temperature regime began. The measured pressure drop across the orifice used to measure recirculation remained relatively constant, and the decline in recirculation was due to a lower fan efficiency with less dense (i.e. hotter) air. Through the constant temperature stages, fresh air addition declined from 15% of the recirculation volume to around 3%.

During the initial stages of some other trials, the recirculation rate was found to decrease with time. Measured pressure profiles indicated that water draining from the compost and collecting at the interface of the compost and shade mesh on the floor was responsible. The wetter the compost initially, the more pronounced this phenomenon. The maximum water content, without significant drainage occurring, was about 78% for the materials used here. This effect disappeared within 24 h, excess water either draining from the container or being removed by evaporative cooling. With the relatively open floor (about 60% porosity) and the light shade mesh used here, a pressure drop of about 4000 Pa/m across the floor materials was found (or a 40–60 Pa total decline across the floor). Pressure profiles measured in the compost showed a logarithmic decrease in pressure with height, similar to that found with other agricultural materials (e.g. Cooper and Sumner 1985).

Oxygen usage and carbon dioxide production

Oxygen, CO_2 and NH_3 concentrations were measured through a port in the exhaust section. Consequently, these values are bulk parameters representative of the exhaust air and the recirculation air before mixing with the fresh air intake; O_2 and CO_2 at a microsite level may be significantly different. Therefore, while the bulk parameters indicate aerobic conditions, some local areas of anaerobic conditions may have existed; however, testing for thiols, hydrogen sulfide and methane, all indicators of anaerobic conditions (Miller and Macauley 1988, 1989; Op den Camp 1989; Miller *et al.* 1991), revealed that aerobic conditions were maintained. Measurement of O_2 profiles within the compost showed a linear decline with height, which indicates uniform uptake of O_2 with height, and no apparent O_2-starved locations. Apart from brief periods in some early trials discussed shortly no indications of anaerobic conditions were found.

During the constant temperature phases of composting, a 1 : 1 stoichiometric relationship between CO_2 production and O_2 usage was found. In some early trials, when operation of the ventilation system was less than optimal, O_2 levels during the initial temperature build-up stage sometimes declined to <10%. At this O_2 level, CO_2 production began to exceed the 1 : 1 stoichiometric relationship, indicating the presence of (locally anaerobic) fermentation reactions. At this stage

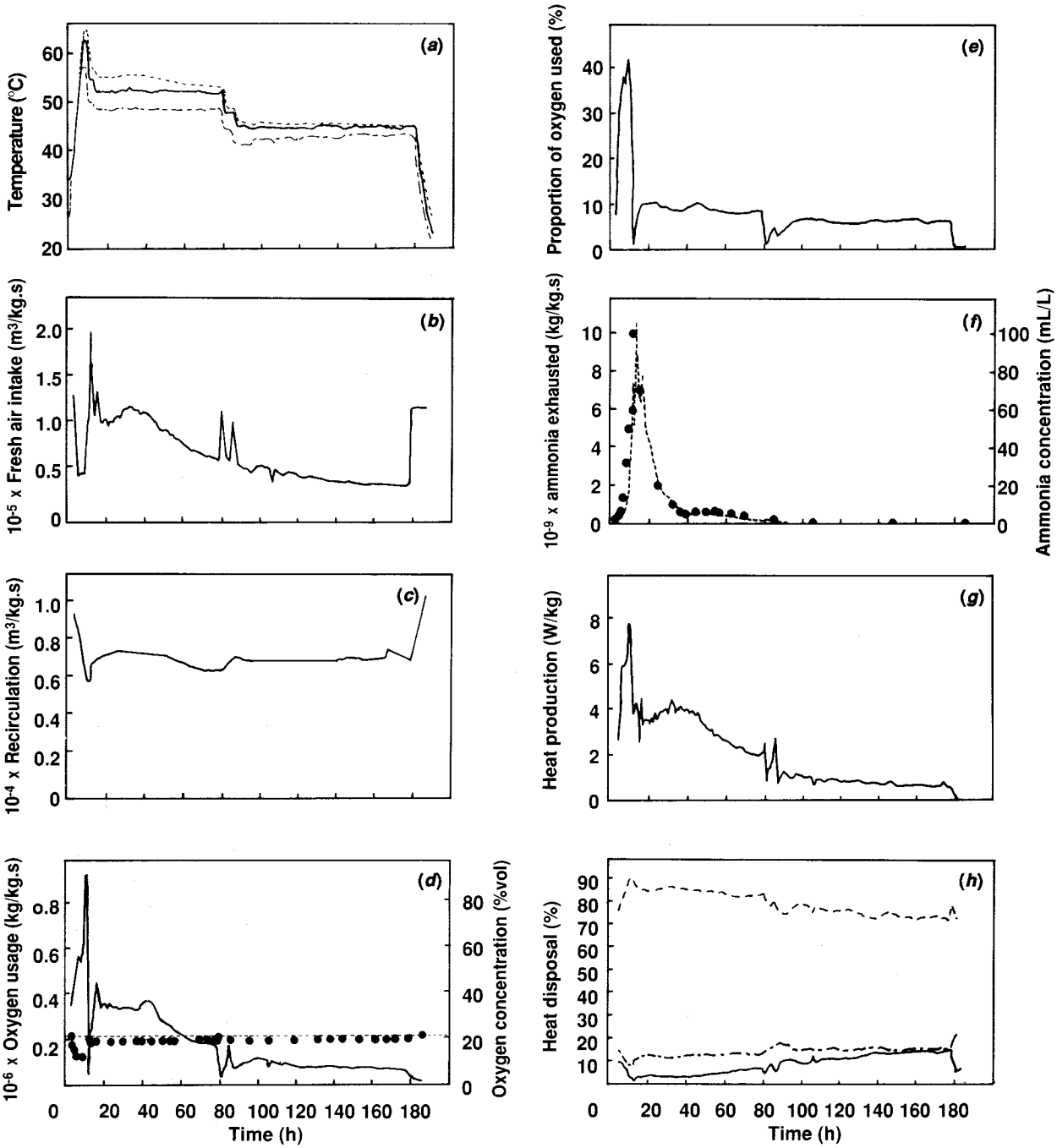

Fig. 2. Trial 15. Relationship of various parameters with time. Cooldown events occur at 10 and 80 h, and a small adjustment is made at 85 h to stabilise the compost temperature at 47°C. Composting is completed at 180 h, when the cooldown for unloading begins. (*a*) Mean compost temperature (——), and air inlet (– –) and exhaust (- - -) temperatures; (*b*) fresh air intake rate (m^3/s.kg compost initially loaded); (*c*) recirculation rate (m^3/s.kg compost initially loaded); (*d*) oxygen concentration in the recirculation air in the exhaust side (●), and O_2 usage (——); (*e*) proportion of O_2 in the fresh air intake quantity utilised in the compost; (*f*) ammonia concentration (●), and calculated losses in kg/kg compost.s (- - -) from the exhaust port; (*g*) heat output as a function of time; (*h*) components of heat removed, as percentage of total latent heat (– – –), and sensible heat losses in exhaust air (– - –), and conductive heat losses from the container and ventilation system (——).

heat production was markedly reduced, and in some instances, temperature decreases were recorded before more oxygenated conditions could be re-introduced.

Trial 15 demonstrates the main pattern of O_2 usage during the composting process. Oxygen usage increased during the temperature build-up to pasteurisation and peaked in the 55–63°C range (Fig. 2*d*). Cooldown to constant temperature then began, so data for higher temperatures were unavailable. Oxygen usage declined after the cooldown, typically to around 50–60% of the peak value. Frequently, a smaller increase in O_2 usage was found, as seen during the 54°C phase at 40 h, presumably due to the new populations utilising remaining substrate and/or unstable products of the high temperature stage. Similar, but smaller, rises were noted occasionally after establishment of the 47°C phase.

Peak O_2 usage for trial 15 was about 9×10^{-7} kg O_2/kg.s (moist compost) or, in terms of fresh air at 20°C, about 0.025 m^3/s. Figure 2*e* shows the proportion of the fresh air intake required to maintain aerobic conditions in the compost. During peak O_2 demand, this proportion reached 40% of the manually set intake rate. At this time, the measured O_2 concentration in the exhaust air dropped to around 12%. Previous experience showed that O_2 concentrations lower than this could result in temperature declines, as mentioned above. After the cooldown, O_2 rose to about 19%, and slowly increased with time throughout the trial. A decline in the proportion of the fresh air intake required to oxygenate the compost was evident. From the cooldown to 54°C until the end of the trial, the majority of fresh air was required to remove excess heat rather than to supply O_2 to the compost. Trials conducted at 47°C were more moderate in O_2 demand, exhibiting a demand similar to that seen in the 54°C constant temperature period for trial 15.

Ammonia production and release

Typically, NH_3 concentrations in the exhaust and recirculation air rose to their peak values within 20 h. Peak NH_3 values coincided with peak temperatures in trials where temperatures were allowed to rise to 63°C. As the fresh air intake was at a minimum until pasteurisation was completed, the location of this peak can be explained by rapid volatilisation of NH_3, combined with a low exhaust rate. Losses and concentrations of NH_3 for trial 15 are shown in Fig. 2*f*.

Trials at constant temperature (47°C) demonstrated significantly lower peak NH_3 values but similar overall NH_3 losses from the system. High temperatures were found to affect NH_3 concentrations. In trial 14, which inadvertently heated to 70–72°C during the initial composting phase, the highest peak value of 1500 µL/L was recorded. This resulted in the highest NH_3 exhaust rate of 2.5×10^{-8} kg/s.kg compost. It also proved impossible to clear NH_3 in the 47°C phase of this trial, even by extending the processing time to 250 h. Ammonia remained at 200 µL/L, which implies a volatilisation rate of about 8.3×10^{-9} kg/s.kg compost throughout this period. In a second trial (trial 13), where the straw was heated to 80°C before mixing and composting, total NH_3 losses again were high. Where pasteurisation was completed at more moderate temperatures, the volatilisation rate had fallen to zero by the end of the trial.

Calculation of total N at the beginning and end of each trial indicated large inaccuracies in either the sampling scheme or the chemical analysis technique, as a net gain in total N was recorded in 2 trials. The mass flow model was therefore the preferred method of calculation for NH_3 losses.

Trials gave varying losses, ranging from 3.6×10^{-5} kg NH_3/kg compost for trial 7 to 1.1×10^{-4} kg NH_3/kg compost for trial 14. Trial 7 was a 47°C constant temperature trial, with low initial N (1.44%).

No odiferous compounds other than NH_3 were detected while composting was aerobic. Anaerobic conditions resulted in unidentified, but pungent, odours.

Compost density, mass loss and moisture

Mass loss during cooldown events was almost totally due to loss of water vapour, as indicated above. Very early in processing, when the fresh air intake was small, gravitational drainage of water from the compost, and subsequent leakage from the tunnel, was sometimes responsible for very high mass loss rates. When this occurred, these time periods were excluded from model calculations.

Both the wet and dry compost densities showed an initial rise. This initial increase was the result of the decrease in compost height due to self loading and, hence, compression of the underlying compost in the first 24 h. The decrease in compost height then slowed. After this period, wet density demonstrated an exponential decline. Dry matter loss was a much smaller component of mass loss and remained relatively constant throughout the remainder of the trial. The final wet and dry densities were similar through all trials, having mean values of 298 and 101 kg/m^3, respectively. However, the final density at unloading had little effect on the cropping density, as the compost was pressed into the trays by a hydraulic ram.

Sampling at the completion of trials showed little horizontal variation, but a large vertical change in density. Dry matter density increased with depth, from a surface value of 95 kg/m^3 to a maximum of 170 kg/m^3 about 0.3 m from the floor, and appeared to be a result of self loading and compression of the base compost. The constant density below 0.3 m suggests that the compost had reached maximum compressibility and that higher initial loadings are unlikely to increase greatly the base density of the compost. This increase in density, and

therefore reduction in the pore space available for air flow, contributed to the large pressure gradient measured across the compost.

A pronounced moisture gradient from the base to the surface was noted in all trials, averaging 4% in trial 15. Evaporative drying, particularly in a 0.15-m-high region near the floor, was extensive. A gradient in moisture was also present lengthways down the tunnel, the compost being 4% wetter on average at the end furthest from the fan. This effect was presumed to be due to uneven air flow distributions, the increased path length down the container increasing the resistance to air flow. Localised areas of very high moisture content (in excess of 80%) also occurred at sites where condensation formed. The 2 major causes of condensation were air leakage from seals (near examination ports and doors), and the formation of condensation on the exposed walls and roof via conductive heat losses.

The final moisture content predicted by the model for trial 15 was 64.6%, which compared favourably with the measured value of 65.7%. This discrepancy may be explained by the uncertainty in O_2 concentration and, hence, in the partitioning of losses to water and dry matter losses, but more likely, it was due to variability in the compost moisture content. Calculated metabolic water production ranged from 0.29 to 0.71 kg/kg dry matter lost, with a mean value of 0.48 kg/kg. While this mean is similar to that found by Griffin (1977) and Hogan *et al.* (1989), the large range for similar substrates indicates sampling or analysis error.

Heat production and removal

Total heat production was insensitive to the temperature of composting. The 47°C constant temperature trials, with the exception of trial 11, released amounts of heat similar to the higher temperature regime (Table 2). Multiple regression of the initial starting mixture components against total heat production showed the only significant factor (at a 15% level) to be the quantity of deep litter (DL) used.

Table 2. Heat output (MJ/kg compost), dry matter, initial volatile matter or decomposed material, and heat output rate (kJ/kg.h) for trials 6–15

Trial	Compost	Dry matter	Initial volatile matter	Decomposed material	Heat output (kJ/kg.h)
6	1.42	5.70	6.47	18.1	3.91
7	1.01	4.35	5.56	16.6	6.52
8	1.14	4.96	5.78	19.2	6.38
9	1.05	4.70	5.57	15.4	5.62
10	1.36	5.58	6.46	16.5	6.71
11	0.92	3.06	4.04	—	6.33
12	1.51	6.70	7.57	20.6	7.25
13	1.34	5.61	6.84	22.0	5.50
14	1.34	5.45	6.47	19.9	5.21
15	1.21	5.00	5.74	16.7	6.40
Mean	1.23	5.11	6.01	18.3	—

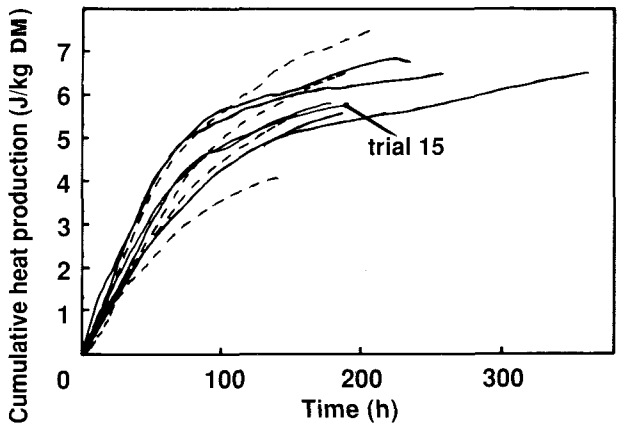

Fig. 3. Cumulative heat output as a function of time for all trials (- - -, 47°C constant temperature trials; ——, pasteurised trials). Trial 15 is indicated.

Total heat production ranged from 0.92 to 1.51 MJ/kg moist compost loaded. The low value for trial 11 is the result of pre-composting outside the tunnel for 4 days, when any heat released is unaccounted for; however, trials 7 and 9 also received pre-composting, but this resulted in higher total heat production. Trial 9 did not include a DL component, cotton seed meal being the only N source (straw/cotton seed meal, 0.43). As DL is a strong microbial inoculum, the high heat yield of trial 9 may have been due to a slower biomass build-up in the pre-composting period. Trial 7 had a low DL component (straw/DL, 0.24) and only 2 days pre-composting.

There was little difference in heat output between the 47°C constant temperature trials and trials which received pasteurising temperatures (Fig. 3). Heat production in the pasteurising trials was higher during the temperature build-up stage than in the constant temperature trials, but this period of high heat output was limited. Heat production for trial 15 is shown in Fig. 2*g*. In common with the other pasteurised trials, heat production reaches a maximum in the 55–63°C range (see Fig. 2*a*). The maximum value recorded in all trials was 9.0 W/kg of initial compost (or 38 W/kg initial volatile matter) in trial 14.

Of note was the extremely rapid increase in heat output (Fig. 2*g*), indicating a rapid biomass increase. When fresh air was added there was a decline in heat production. Heat production did not reach the same level after pasteurisation, but in common with O_2 usage, it showed a second peak around 40 h. The establishment of a new, stable population structure, and the utilisation of unstable products from the pasteurisation stage, may have been the cause. Heat production then gradually fell as substrate nutrition became limiting. The constant

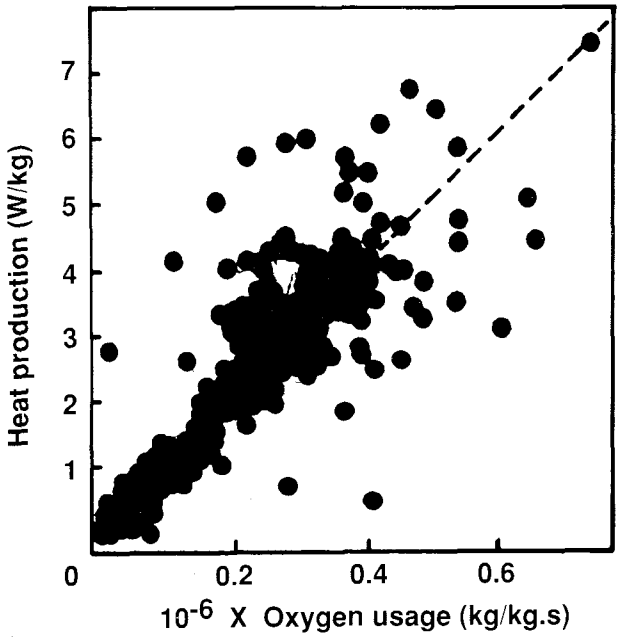

Fig. 4. Heat output *v.* O_2 usage on an initial wet compost mass basis. The regression equation is $H = 9760 \times O_c + 0.002$ ($r^2 = 0.77$; both parameters significant at $P<0.01$), where H is total heat production (kJ/kg), and O_c is O_2 consumed (kg/kg).

temperature trials showed similar heat production patterns, albeit with no intense peak but sustained, higher levels of heat production.

Heat removal occured mainly as latent heat losses throughout composting (Fig. 2*h*), with this component never declining below 70% of the total losses. Sensible heat loss increased slightly with time, due to the decline in temperature which lowered the saturated moisture load of the exhaust air. Conductive losses increased from around 3% of the total heat loss at pasteurisation temperatures to a significant 14–15% at the completion of composting, a consequence of the decreasing heat production of the compost. With continued composting, this component would have become even more important. The initial decline in both the sensible and conductive components, up to 10 h when pasteurisation occurred, was due to the rapidly increasing moisture load of saturated air.

Heat production and O_2 utilisation were linearly related (Fig. 4), resulting in a mean total heat production of 9.8 MJ/kg O_2 consumed (across all trials). There was no difference between the 47°C and pasteurising trials. Scatter in the data was more pronounced at high heat output values. This was due to the uncertainty in the O_2 concentration being multiplied by high mass flow, and to the fact that the damper was likely to be opening and closing rapidly to maintain temperature, resulting in rapidly changing air intake rates. The linearity in this relationship indicated that heat was produced by a similar mechanism throughout the temperature range employed.

Discussion

The ECC system used in these trials performed adequately under the designed compost loadings and gave good temperature and O_2 control. Temperature variations vertically through the compost were generally <3°C, and the O_2 concentration showed <1% variation at all times. Visual assessment of the compost at unloading was that a uniform material was produced, with the exception of the wetted sides and the drier base area. This apparent uniformity in compost may be due to the high recirculation volume, which minimises both the temperature gradient across the compost and the variability in O_2 status. Consequently, the microbiologically dominated composting process is uniform within the tunnel. The recirculation rate range of 0.08–0.14 m^3/t.s is higher than reported for Phase II composting installations (e.g. 0.06 m^3/t.s; Gerrits 1984) and explains the lower temperature gradients in ECC than in these Phase II trials. However, the heat removal and O_2 requirements for Phase II composting are also lower, and this is reflected in the lowered fresh air requirements. Adequate commercial mushroom composts are produced from the Phase II systems using fresh air addition rates of 0.003–0.013 m^3/t.s, with the lower value being adequate for heat removal and oxygenation requirements (Gerrits 1984). Peak fresh air intake rates for ECC are much higher, in the order of 0.025 m^3/t.s, and reflect the much higher heat output during the initial stages of these trials when microbial growth is rapid.

The control regime included as rapid an increase in temperature as possible and, combined with the high initial O_2 usage rate, can create a situation where O_2 can become limiting. Peak O_2 usage rates allow prediction of the fresh air volumes required to maintain oxygenation. For trial 15, a fresh air addition rate of 8 m^3/t.h was required to maintain O_2 contents in the 12–14% range. Trial 15 provides a guide for mushroom composting. Peak rates measured here are intermediate to pure straw systems (0.04–0.35 m^3/t.h; Harris 1979) and solid organic waste composting (23 m^3/t.h; McCauley and Shell 1956).

For the temperature range used here, the relationship between O_2 consumed and heat produced is linear and shows 9.8 MJ released per kg O_2 consumed. Stoichiometric models predict 14.0 MJ of heat released per kg O_2 consumed during the complete oxidation of organic matter (Finstein *et al.* 1986). Differences between this theoretical value and the measured value may be due to a more highly oxidised final substrate and the escape of volatile organic compounds. Heat output

within the temperature range used here could be predicted reliably from this relationship.

Most work on microbial heat production has been carried out in small scale, pure culture systems. In contrast, the ECC system is a large scale, mixed culture system which may lead to differences in total substrate utilisation. Previous measures of heat output in mushroom composts have only been made in small scale reactors (Miller *et al.* 1989). In this work, heat output ranged from 8.7 W/kg at 55°C to 10.5 W/kg at 45°C on a volatile matter basis, with rates averaged over 12-h periods. A similar analysis for trial 15 results in a heat output of 18 W/kg volatile matter at 55°C. Peak heat output over short periods, although known less accurately than the above averages, is about 30 W/kg volatile matter in the 55–63°C range. This increased heat output is due to the ECC system being operated under conditions for optimal activity early in the processing, which, in turn, builds up a large biomass. Total heat production (Table 2) is similar to that of other energy-dense composts. Using the small scale reactor mentioned above, Miller (1984) obtained a range of 15.2–21.8 MJ/kg decomposed dry matter for sewerage sludge and wood chip mixtures. Hogan *et al.* (1989), using the same system with a rice hulls and rice flour substrate, obtained a range of 14.2–16.7 MJ/kg decomposed dry matter. The large range in total heat output encountered in these trials may be due to widely differing initial components and to the effect of heat lost during pre-composting. Attempts to predict the heat output from the initial components were unsuccessful. While deep litter is a major determining factor in heat output from the compost mixtures used here, the variability in moisture and composition precludes the development of any general relationship. Pre-composting may lower total heat output if significant activity is allowed to occur before loading. Measures of composting activity through heat evolution in the ECC system may provide a means of improved process management.

Loss of mass in ECC is mostly through loss of water, which is used to cool the compost evaporatively. Dry matter losses are restricted to around 30%. This is a significant saving in raw materials compared with conventional composting, which can result in dry matter losses of up to 60%. However, dry matter losses in conventional composting are strongly affected by the length of the Phase I stage (Flegg and Randle 1981), and dry matter losses similar to those of ECC can be obtained by shortening Phase I to 3 days.

Air flow is the most important design factor in ECC systems. Sufficient air capacity should be provided to carry away the maximum heat load. The quantity of fresh air required for this is about 90 m^3/t.h (assuming that fresh air RH is 80% at 25°C). More energy-rich or energy-dense composts may have even higher heat outputs. Heat production at the 54°C constant temperature stage may provide a guide: using the above assumptions, this period would require around 45 m^3/t.h. Ventilation capacity should obviously be based on the heat removal requirement rather than the O_2 demand of compost.

The ECC system can produce information for the rational design of other large scale composting systems with substrates other than mushroom compost. Further, basic research is made possible in a realistic system that permits execution of controlled environment investigations into composting ecology. Microbial activity can be monitored as it occurs by measuring metabolic heat evolution. The effects of various physical factors on composting activity can be determined through direct experimentation. Control of physical variables can also permit investigations into substrate nutrition and subsequent mushroom nutrition. Spatial uniformity and controlled environment allow meaningful population studies in a system of special interest for its rapid population changes.

Acknowledgments

This research was supported by grants from the Australian Mushroom Growers Association and the Australian Horticultural Research and Development Corporation. The authors would like to acknowledge the extensive assistance given by the staff of Melbourne Mushrooms Pty Ltd, David Blunt and Frank Bizzotto (Bulla Mushrooms Ltd), and Kevin Gorman (Kevin Gorman and Associates).

References

American Society of Heating Refrigerating and Air-Conditioning Engineers. (1981). 'ASHRAE Handbook 1981 Fundamentals.' (American Society of Heating Refrigerating and Air-Conditioning Engineers Inc.: Altanta, GA, U.S.A.)

Barrow, G. M. (1973). 'Physical Chemistry.' (McGraw-Hill Kogakusha: Tokyo.)

Carlyle, R. E., and Norman, A. G. (1941). Microbial thermogenesis in the decomposition of plant materials—Part II. Factors involved. *Journal of Bacteriology* **41**, 699–724.

Cooper, S. C., and Sumner, H. R. (1985). Airflow resistance of selected biomass materials. *Transactions of the American Society of Agricultural Engineers* **28**, 1309–12.

Fermor, T. R., Randle, P. E., and Smith, J. F. (1985). Compost as a substrate and its preparation. *In* 'The Biology and Technology of the Cultivated Mushroom.' (Eds P. B. Flegg, D. M. Spencer and D. A. Wood.) pp. 81–110. (John Wiley and Sons: Chichester, UK.)

Finstein, M. S., Miller, F. C., and Strom, P. F. (1986). Waste treatment composting as a controlled system. *In* 'Biotechnology, Vol. 8.' (Eds H. J. Rehm and G. Reed.) pp. 363–98. (VCH Verlagsgesellschaft: Weinheim, Germany.)

Flegg, P. B., and Randle, P. E. (1981). Relation between the initial nitrogen content of mushroom compost and the duration of composting. *Scientia Horticulturae* **15**, 9–15.

Fritschen, L. J., and Gay, L. W. (1979). 'Environmental Instrumentation.' (Springer-Verlag: New York.)

Gerrits, J. (1984). Further studies on factors in bulk pasteurization and spawn running. *In* 'Proceedings of the International Symposium on Substrates for Mushroom Growing and Cultivation of *Pleurotis* sp., Hungary'. pp. 31–49.

Gerrits, J. (1987). Compost treatment in bulk for mushroom growing. *Mushroom Journal* **182**, 471–5.

Griffin, D. M. (1977). Water potential and wood-decay fungi. *Annual Review of Phytopathology* **15**, 319–29.

Harris, D. (1979). Measurement of O_2 uptake by straw microflora using an oxygen electrode. *In* 'Straw Decay and its Effects on Disposal and Utilisation.' (Ed. E. Grossband.) pp. 265–7. (Wiley-Interscience: Chichester, U.K.)

Hogan, J. A., Miller, F. C., and Finstein, M. S. (1989). Physical modeling of the composting ecosystem. *Applied and Environmental Microbiology* **55**, 1082–92.

Jiang, S., Jofriet, J. C., and Mittal, G. S. (1986). Thermal properties of haylage. *Transactions of the American Society of Agricultural Engineers* **29**, 601–6.

Laborde, J., Olivier, J. M., Houdeau, G., and Delpech, P. (1986). Indoor static composting for mushrooms (*Agaricus bisporus* lge Sing) cultivation. *In* 'Cultivating Edible Fungi.' (Eds P. J. Wuest, D. J. Royce and R. B. Beelman.) pp. 91–100. (Elsevier: Amsterdam.)

MacGregor, S. T., Miller, F. C., Psarianos, K. M., and Finstein, M. S. (1981). Composting process control based on interaction between microbial heat output and temperature. *Applied and Environmental Microbiology* **41**, 1321–30.

McCauley, R. F., and Shell, B. J. (1956). Laboratory and operational experiences in composting. *In* 'Proceedings of 11th Industrial Waste Conference'. Purdue University Engineering Bulletin No. 76 (11). pp. 436–53.

Miller, F. C. (1984). Thermodynamic and matric water potential analysis in field and laboratory scale composting ecosystems. Ph.D. Thesis. Rutgers University, NJ. (University Microfilms: Ann Arbor, MI, USA.)

Miller, F. C., Harper, E. R., and Macauley, B. J. (1989*a*). Field examination of temperature and oxygen relationships in mushroom composting stacks—consideration of stack oxygenation based on utilisation and supply. *Australian Journal of Experimental Agriculture* **29**, 741–50.

Miller, F. C., Harper, E. R., and Macauley, B. J. (1990). Composting based on moderately thermophilic and aerobic conditions for the production of commercial mushroom growing compost. *Australian Journal of Experimental Agriculture* **30**, 287–96.

Miller, F. C., Hogan, J. A., and Macauley, B. J. (1989*b*). Determination of heat evolution and activity in mushroom composting through physical modelling. Paper presented at the 5th International Symposium on Microbial Ecology, Kyoto, Japan, August 31, 1989. Abstract No. 0-9-7.

Miller, F. C., and Macauley, B. J. (1988). Odours arising from mushroom composting: a review. *Australian Journal of Experimental Agriculture* **28**, 553–60.

Miller, F. C., and Macauley, B. J. (1989). Substrate usage and odours in mushroom composting. *Australian Journal of Experimental Agriculture* **29**, 119–24.

Miller, F. C., Macauley, B. J., and Harper, E. R. (1991). Investigation of various gases, pH, and redox potential in mushroom composting Phase I stacks. *Australian Journal of Experimental Agriculture* **31**, 415–25.

Op den Camp, H. J. M. (1989). Aeroob versus anaeroob: de vorming van methan tijdens composteren. *Champignonculture* **31**, 513–19.

Perrin, P. S., and Gaze, R. H. (1987). Controlled environment composting. *Mushroom Journal* **174**, 195–7.

Ross, R. C., and Harris, P. J. (1983). The significance of thermophillic fungi in mushroom compost preparation. *Scientia Horticulturae* **20**, 61–70.

Sinden, J. W., and Hauser, E. (1953). The nature of the composting process and its relation to short composting. *Mushroom Science* **2**, 123–31.

Smith, J. F. (1983). The formulation of mixtures suitable for economic, short-duration mushroom composts. *Scientia Horticulturae* **19**, 65–78.

Smith, J. M., and Van Ness, H. C. (1975). 'Introduction to Chemical Engineering Thermodynamics.' (McGraw-Hill Kogakusha: Tokyo.)

Straatsma, G., Gerrits, J. P. G., Augustijn, Op den Camp, H. J. M., Vogels, G. D., and van Griensven, L. J. L. D. (1989). Population dynamics of *Scytalidium thermophilum* in mushroom compost and stimulatory effects on growth rate and yield of *Agaricus bisporus*. *Journal of General Microbiology* **135**, 751–9.

Wiley, J. S. (1957). Progress report on high-rate composting studies. *Proceedings of Purdue Industrial Waste Conference* **12**, 596–603.

Young, J. H., and Day, B. H. (1988). Computer generation of Mollier-type psychometric charts. *Transactions of the American Society of Agricultural Engineers* **31**, 1224–32.

Received 11 January 1991, accepted 30 January 1992